Case History

Delivering Trouble-Free Zero-Discharge P & A Operations Through Total Fluids Management

Newpark's total fluids and solids control management solution enabled the successful plug and abandonment of 13 offshore wells on a field located in an environmentally sensitive area, delivering zero-discharge operations and maximizing fluid recycling with no operational downtime.

CHALLENGE	SOLUTION	RESULT
• **Zero-discharge offshore environment** • **Legacy gas & oil residues** • **<220-ppm oil content limit on recycled fluids** • **No precedent – first time operation in region**	• **Newpark designed, deployed and managed fully integrated fluids handling and treatment system for maximum fluid recycling and zero discharge** • **Equipment layout designed to minimize footprint on main deck**	• **Staged fluid separation and filtration to treat contaminated fluids** • **Continuous oil-in-water monitoring to assure fluid quality** • **Zero NPT associated with fluid treatment operations**

OVERVIEW

The P&A campaign was planned on a field located offshore Spain in the Western Mediterranean and adjacent to a highly sensitive tourist coastline—involved the permanent abandonment of 13 wells. Originally drilled more than 25 years ago as oil producers and later converted into gas-storage injectors after reservoir depletion, these wells were scheduled for full decommissioning when the client elected in 2025 to discontinue operations.

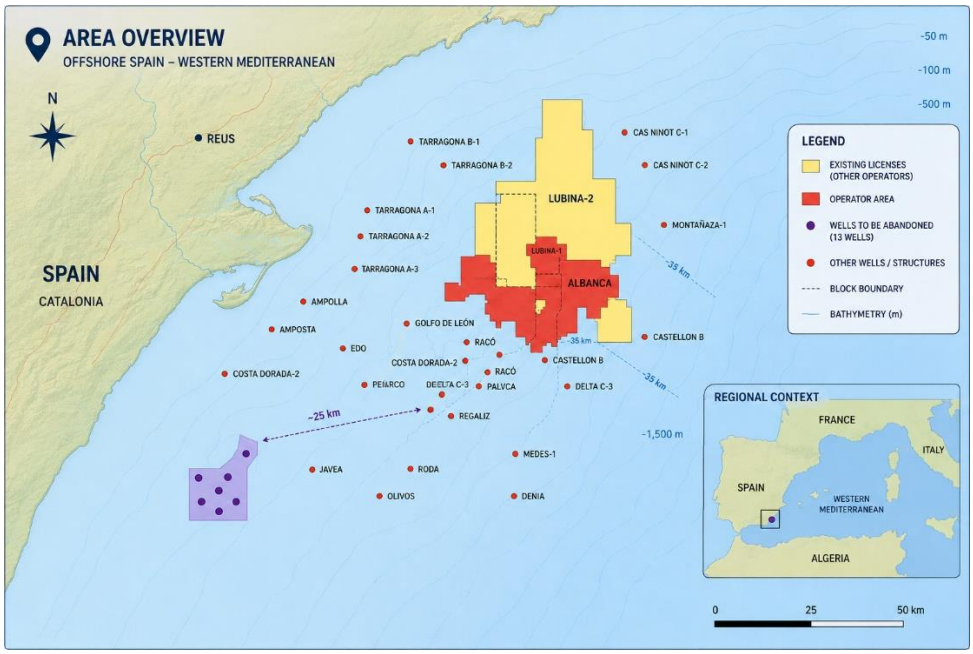

NEWPARK FLUIDS SYSTEMS

Case History



The Plug & Abandon (P&A) campaign presented two primary challenges:

- Achieving total fluids containment with zero discharge to sea,
- Reducing hydrocarbon content in returned well fluids to <220 ppm before storage and treatment in the rig pit system.

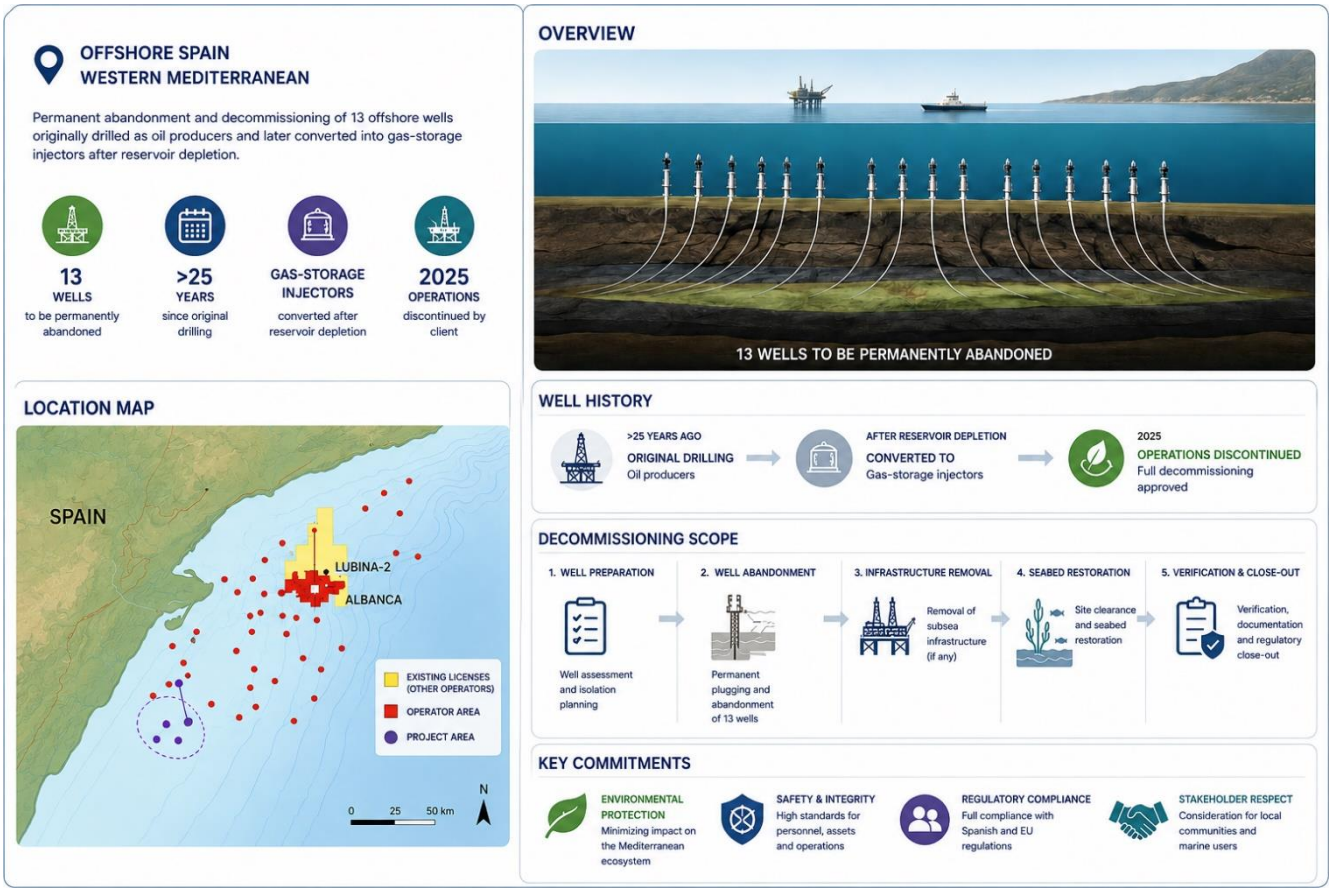

CHALLENGE

Stage 1 of the P&A program required displacing all wellbore fluids with brine. While straightforward in concept, the displacement design quickly revealed significant complexity.

The wells still contained **pressurized gas, residual hydrocarbons**, and **accumulated solids**, all of which had to be handled under a strict **zero-discharge environmental mandate**. No fluid—regardless of composition—could enter the marine environment. Simultaneously, the rig's surface pit system could only receive fluids once the oil-in-water concentration was **verified below 220 ppm**, creating a narrow operational window between containment, treatment, and reuse.

The absence of offset wells or regional precedent meant the operation had to be engineered as a first-of-its-kind decommissioning campaign in the Northwest Mediterranean. All materials recovered from the wells had to be contained, processed, and certified before any transfer, with no margin for error.

Case History



SOLUTION

Although Newpark was initially contracted only to provide filtration services, early site assessment highlighted the need for a broader, integrated fluid-management package. The scope expanded to include equipment, storage, treatment, and operational oversight—designed to minimize containment costs while maintaining workflow efficiency.

The Newpark team worked closely with the customer and rig contractor to design and deploy a fully integrated surface processing system on the main deck. All well returns were routed through a staged treatment train consisting of;

- Oil–solids–water separation units
- Filtration systems fitted with oil-absorbing cartridges
- Dedicated pumps and transfer lines
- Receiving, intermediate, and delivery tanks for controlled fluid movement

To maintain operational continuity, an external storage array of ten 20-m³ ISO tanks was mobilized, enabling buffering, segregation, and testing of fluids at various treatment stages. A team of specialized Newpark technicians operated and monitored the system around the clock.

A key operational decision point was determining when treated fluids could be safely transferred into the rig mud pits. This was governed by continuous measurement using a field-deployed INFRACAL oil-in-water analyzer, ensuring compliance with the <220-ppm threshold and minimizing reliance on external storage.

Newpark Total Fluids Management Package:

- 2 x Oil Water and Solids Separators
- 3 x 3” Diaphragm Pumps
- 2 x 2” Diaphragm Pumps
- Receiving Fluid Tank 4.8-m^3 capacity
- Processed Fluid Tank 4.8-m^3 capacity
- Buffer Holding Tank 4.0-m^3 capacity
- 2 x Twin Pod Cartridge Filtration Units



Figure 1 - Fluids Management Package, equipment installed on main deck

NEWPARK FLUIDS SYSTEMS

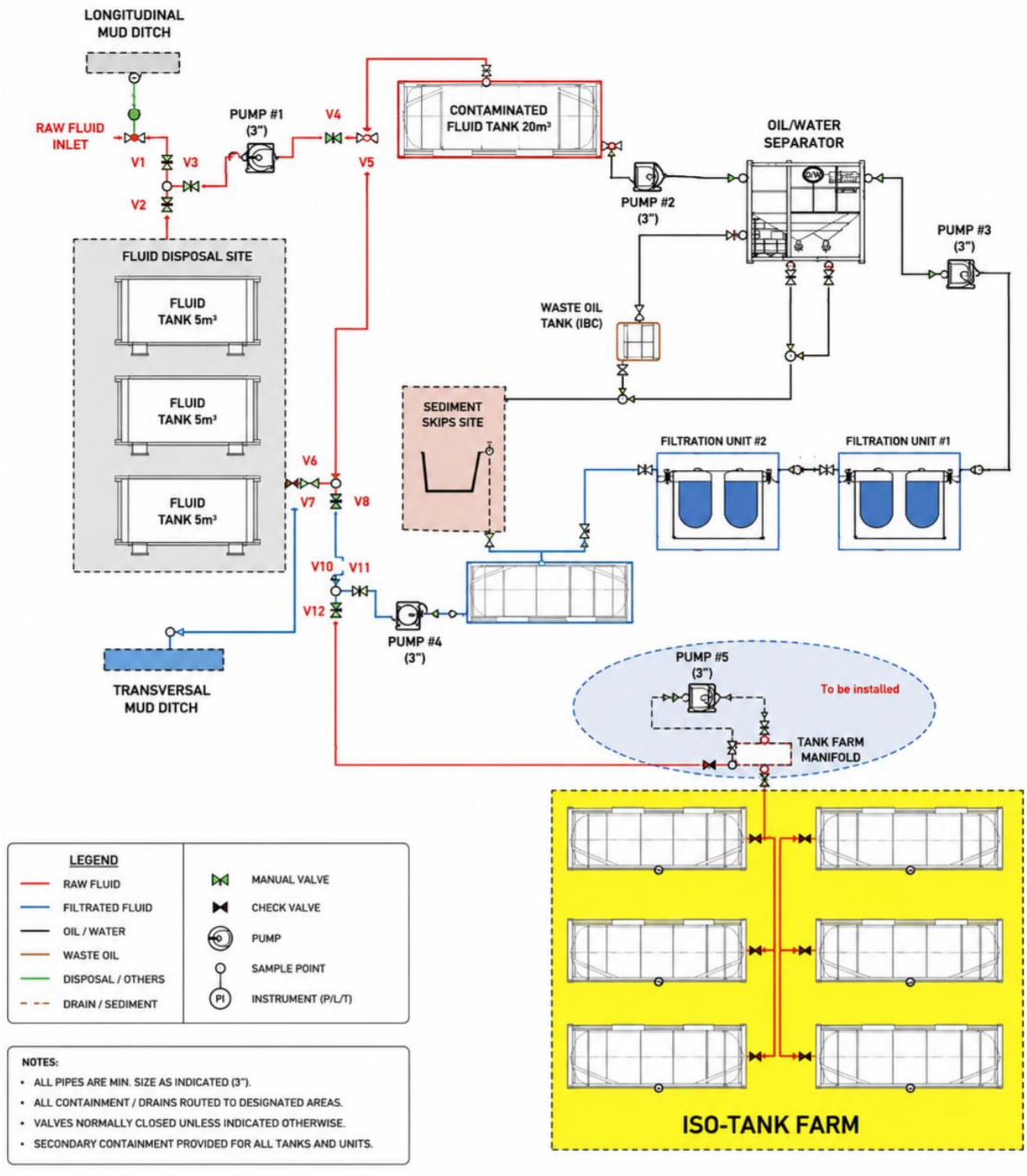

Figure 2 - Total Fluids Management, schematic layout

Case History



RESULTS

Two major outcomes emerged as the operation progressed:

1. **Reduced onshore disposal volumes**
   A significant portion of wellbore fluids was successfully treated and reused offshore, minimizing the volume requiring transport to shore.
2. **No impact on rig schedule**
   Oil-in-water specifications were consistently met without delaying rig operations, avoiding additional rig days.

Quantitatively, each cubic meter of fluid retained and reused offshore reduced the cost and logistics necessary for onshore treatment, requiring only an average of 2.71 cartridge filters per m^3 for treatment to remain fully compliant with environmental regulations.

At the end of Stage 1 of the project, the client had achieved full regulatory compliance, completed operations on schedule and significantly reduced downstream handling requirements - demonstrating the value of the Newpark integrated fluid-management approach.

Results

Parameter	Qty	Unit
Brine processed in total	2142	m3
Filters used in total	5800	filters
Filters used per m3	**2.71**	filters/m3
Oil retainable by one filter (theoretically)	1	l/filter
Oil retainable by all filters (theoretically)	5800	l
Oil separated by filter units	33%	
Oil before filter units	**270**	PPM
Oil separated by filter units	**90**	PPM
Oil separated by filter units	193	l
Oil separated by OWS batch	5	l/20-m3
Oil separated by OWS	**250**	PPM
Oil separated by OWS	535.6	l
Oil total in brine	**520**	PPM
Oil total in brine	1114	l
Oil separated by system	**340**	PPM
Oil separated by system	728.3	l

PPM dynamics 520 > 270 > 180

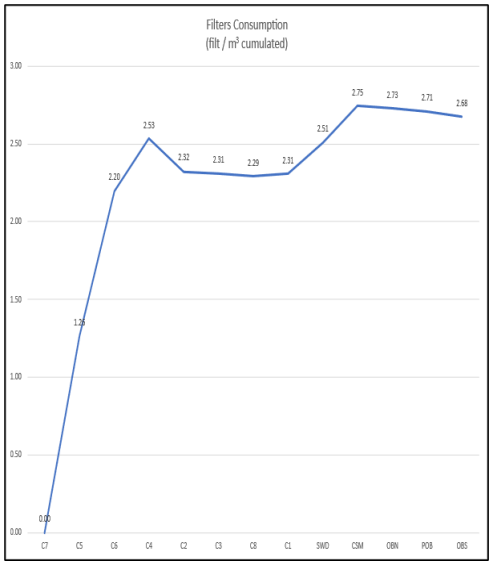

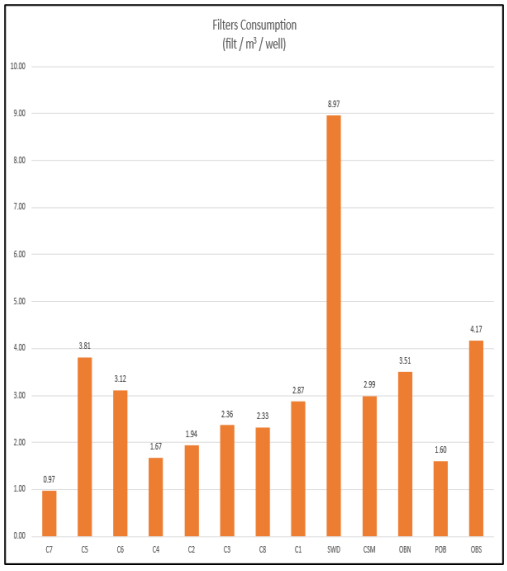

Fig 3 : results description:

Left: Oil Content reduced from 520 to 270 ppm through Oil Water Separator, then 180 ppm after filtration

Centre: Volume of fluid (m^3) treated per oil absorbent filter cartridge consumed

Right: Total filter cartridge consumption per well

NEWPARK FLUIDS SYSTEMS